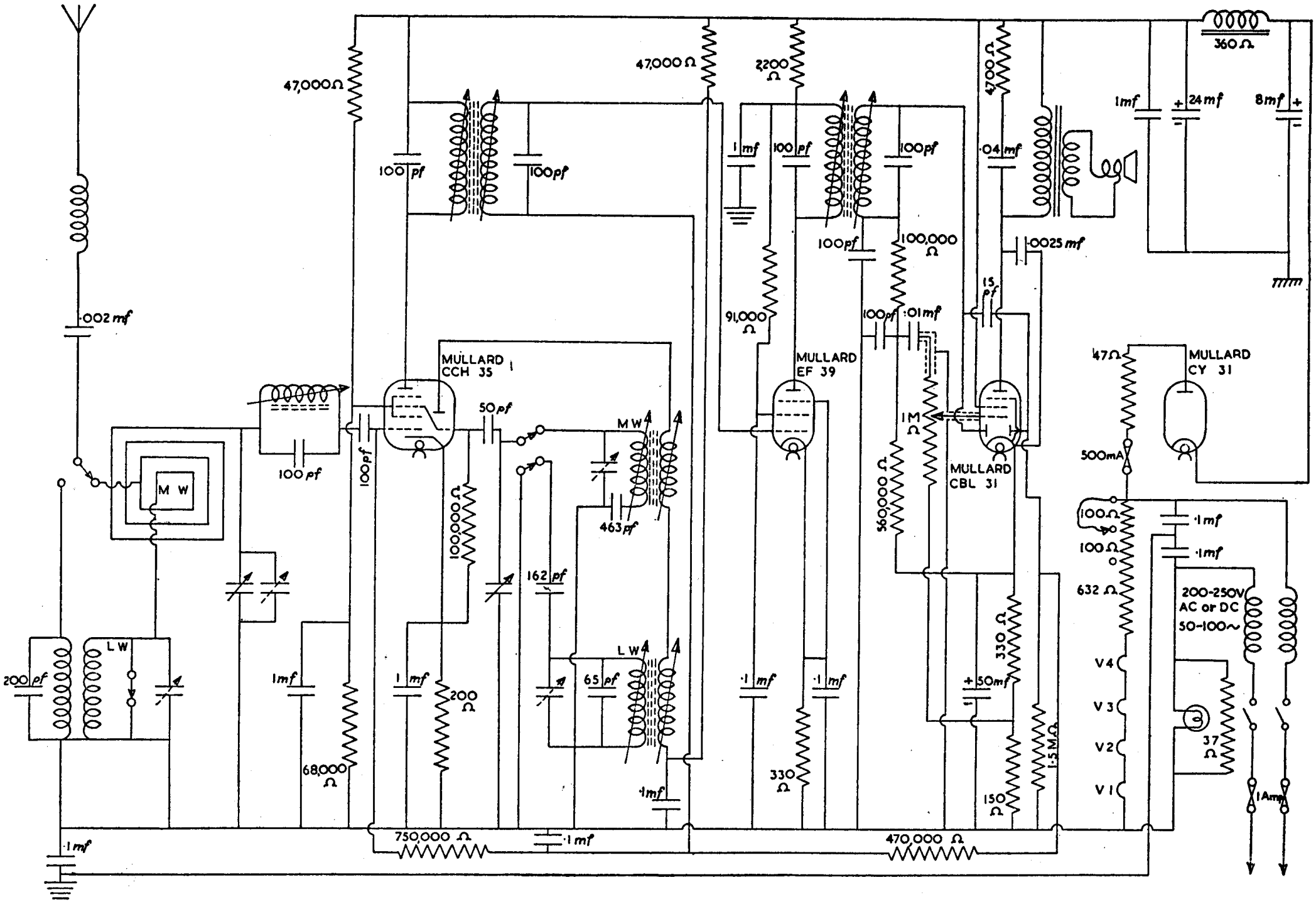

THE EKCO MODEL U29